Led Indicator

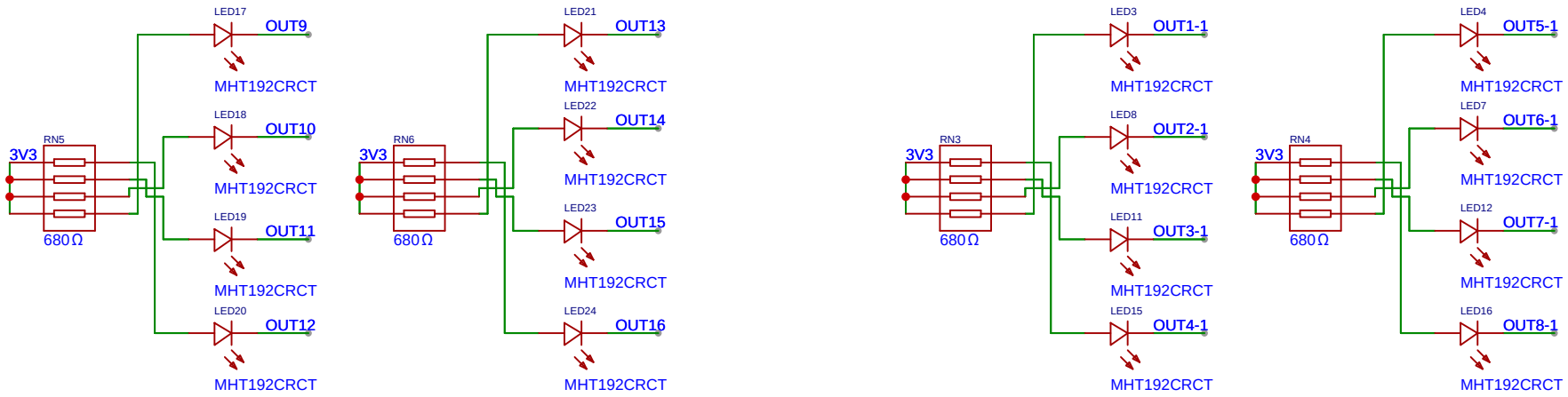

Connector

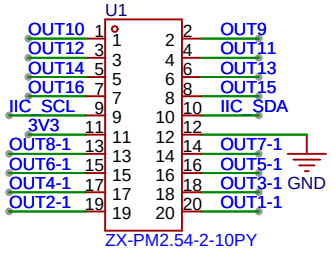

carletz	DOMIX - Domotic module for smart home & co		Create at	2026-02-03	Drawn	carletz
			Update at	2026-02-03	Reviewed	carletz
	Version	Size	Page 1 Total 1	Schematic	M7 - Display Module		
	1	A4	EasyEDA	Board	U7 - OUTPUT - UPPER	Page	Board